ACTUNEX®

YABEi MOTIONS DRIVE

PRODUCT DATASHEET

HTL4

TELESCOPIC LIFTING COLUMN

For embodied robotics and mobile inspection

HTL4-E / HTL4-C / HTL4-06



PRODUCT OVERVIEW

Compact telescopic motion for robotics

Height adjustment and controlled positioning in a lightweight, compact package.

The HTL4 series is designed for robotic dogs, autonomous patrol platforms and compact lifting equipment. A multi-stage telescopic column integrates servo-driven motion, stable mechanical support and position control for mobile robotic systems.

UP TO 2,000 mm EXTENDED | APPROX. 4.8 kg (2 m CONFIGURATION)

Compact for integration

Short retracted length and a slim, round column profile suited to constrained envelopes.

Designed for mobility

Applies to quadruped robots, inspection vehicles, AGV/AMR platforms and equipment lifting.

Precision servo motion

Closed-loop position adjustment with controlled start and stop behavior.



EtherCAT: HTL4-E

CANopen: HTL4-C

TECHNICAL DATA

Key technical specifications

25–48 V
DC input voltage

120 N
Maximum thrust

IP66
Ingress protection

TECHNICAL PARAMETERS	
Actuator drive	DC servo motor
Supply voltage	25–48 V DC
Maximum thrust	120 N
Speed under load	0–150 mm/s (stated range)
Retracted installation height	L = S/3 + 200 mm (standard)
Dynamic lateral moment	70 N·m
Static lateral moment	100 N·m
Self-weight	4.7 kg at 1,200 mm stroke
Available finish	Silver gray / black; other colors by request
Noise level	52–62 dB
Operating temperature	−20 °C to +75 °C
Ingress protection	IP66
Screw type	Ball screw, 20 mm lead
Gear reduction	10:1
End-of-travel protection	Software limit and mechanical limit
Communication options	CANopen / EtherCAT / RS485
Cable routing	External cable routing

Dimensions, mass and performance depend on the selected configuration. Confirm final requirements before ordering.

CONFIGURATION DRAWING

HTL4-E | Mechanical dimensions

ETHERCAT

Retracted and extended views

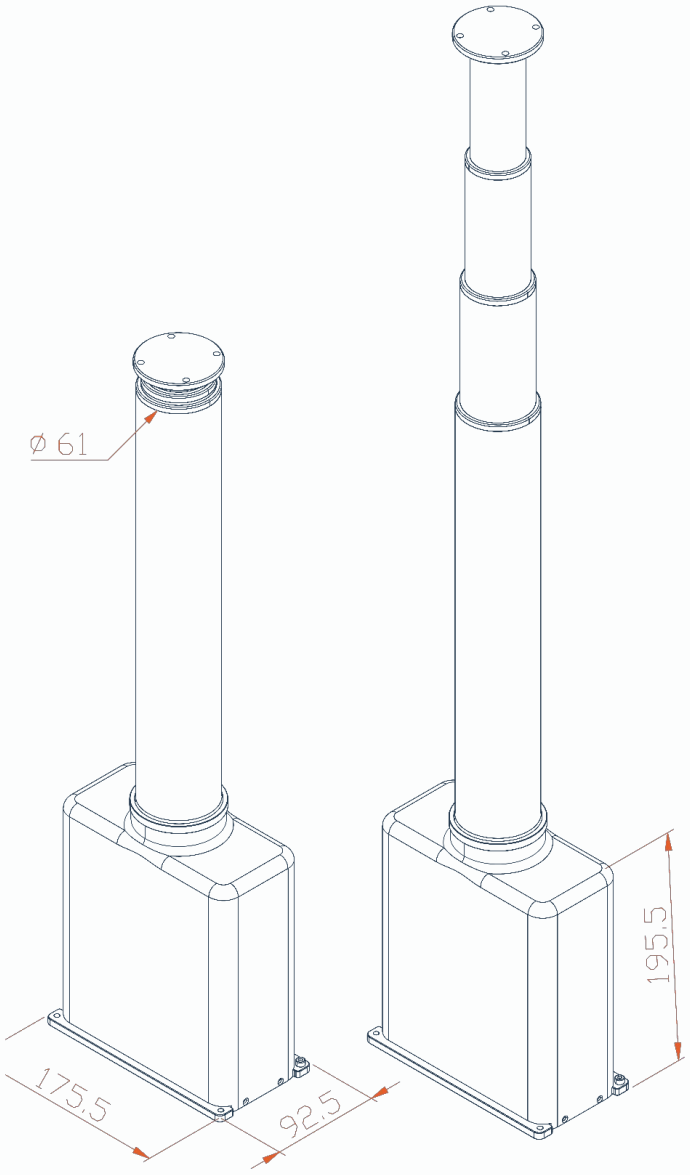

TUBE DIAMETER

Ø61 mm

RETRACTED HEIGHT

L = S / 3 + 200 mm

All dimensions are in millimeters. Source engineering drawings are retained without changing dimensional values.

CONFIGURATION DRAWING

HTL4-C | Mechanical dimensions

CANOPEN

Retracted and extended views

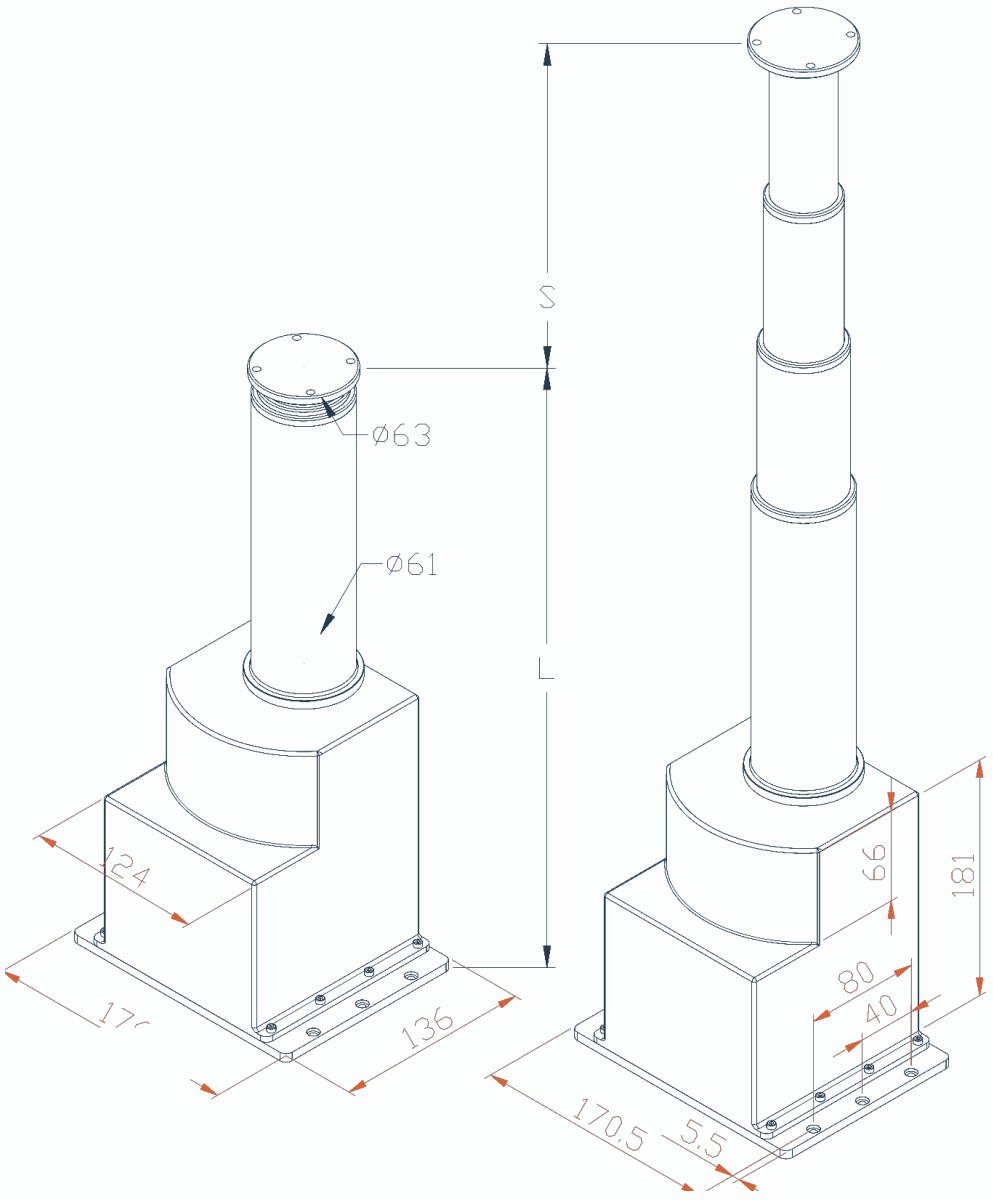

TUBE DIAMETER

Ø61 mm

RETRACTED HEIGHT

L = S / 3 + 200 mm

All dimensions are in millimeters. Source engineering drawings are retained without changing dimensional values.

DIMENSIONAL SELECTION

Stroke & installed-height selection

Both HTL4-E and HTL4-C follow the same source dimension schedule.

STROKE S	RETRACTED L	EXTENDED S + L
300 mm	300 mm	600 mm
450 mm	350 mm	800 mm
525 mm	375 mm	900 mm
600 mm	400 mm	1,000 mm
750 mm	450 mm	1,200 mm
900 mm	500 mm	1,400 mm
975 mm	525 mm	1,500 mm
1,050 mm	550 mm	1,600 mm
1,200 mm	600 mm	1,800 mm
1,350 mm	650 mm	**2,000 mm**

INSTALLATION FORMULA

L = S / 3 + 200

Example: 1,200 mm stroke

600 mm retracted → 1,800 mm extended

APPLICATIONS & CONTACT

Integration applications

Built for mobile robots that need reach without sacrificing packaging space.

Quadruped robots

Sensor mast height adjustment

Patrol & inspection

Extendable vision and sensing

AGV / AMR

Mobile payload positioning

Compact machinery

Height-adjustable lifting stages

ENGINEERING SUPPORT

For installation drawings, 3D models and application-specific configuration, contact our technical sales team.

WENZHOU YABEI ELECTRICAL TECHNOLOGY CO., LTD.

No. 14 Chashan Street, Ouhai District, Wenzhou, Zhejiang 325000, China

www.gemingtech.com

Model selection and final performance should be confirmed for the intended duty cycle and integration.